NEO 800

Art.nr
320405
320406
320407

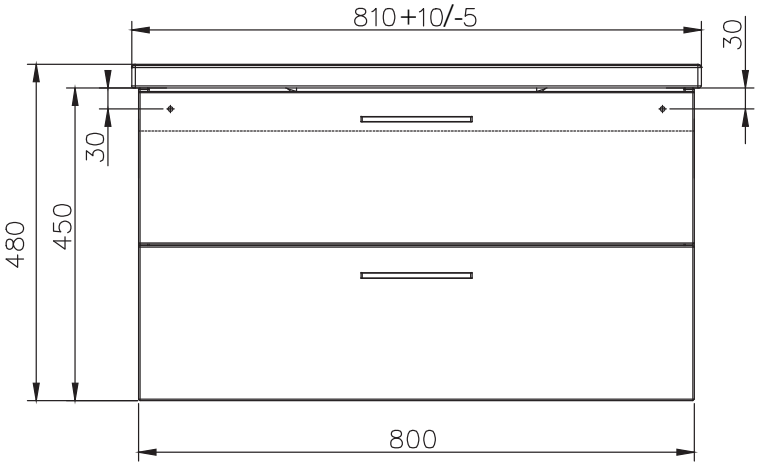

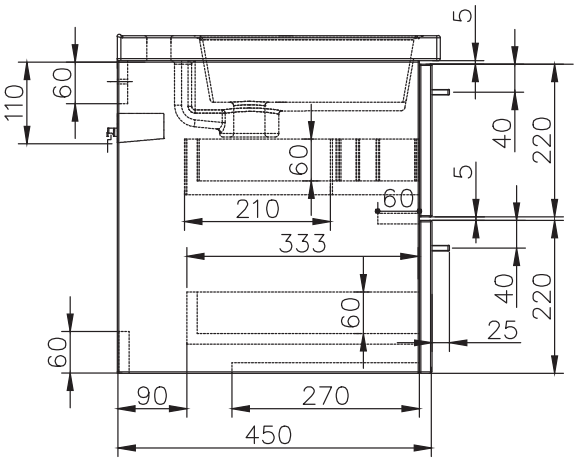

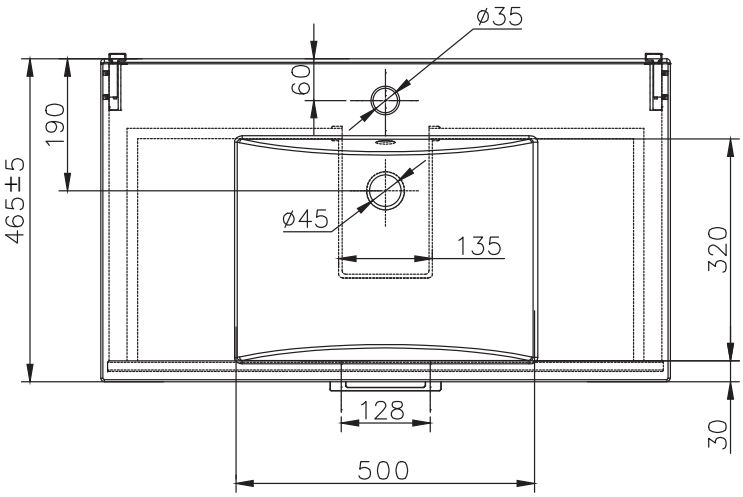

Ver. 2025-12-12