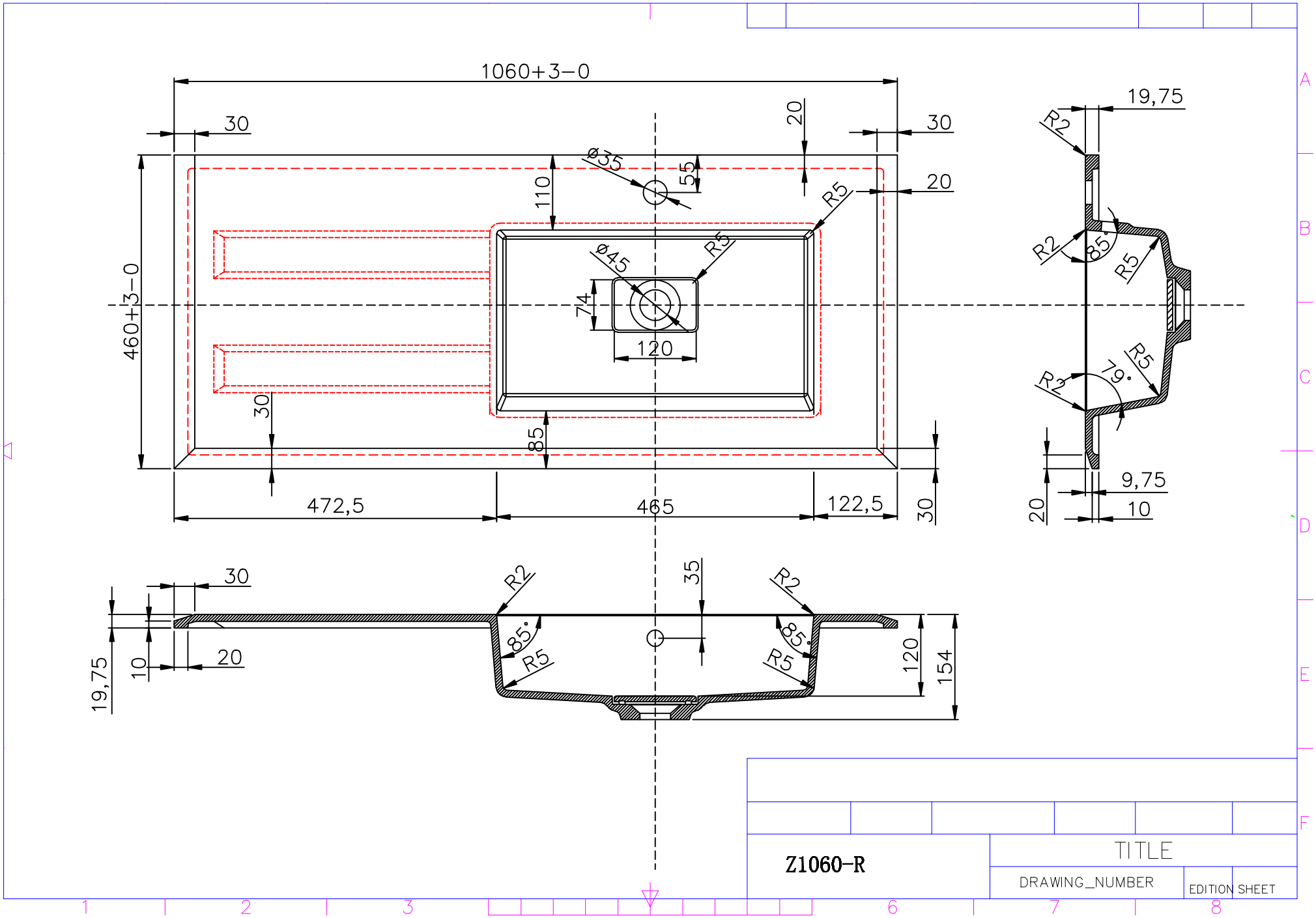

Z1060-R	TITLE		
	DRAWING_NUMBER	EDITION	SHEET